PT6S 26-1250

iC-PT2613 Encoder Disc and Code Description

ORDERING INFORMATION

Type	Order Designation	Description/Options
Encoder Disc	PT6S 26-1250	Incremental Code Disc A/B/Z 1250 PPR, U/V/W 4 PPR, dia 26 mm

PHYSICAL DIMENSIONS

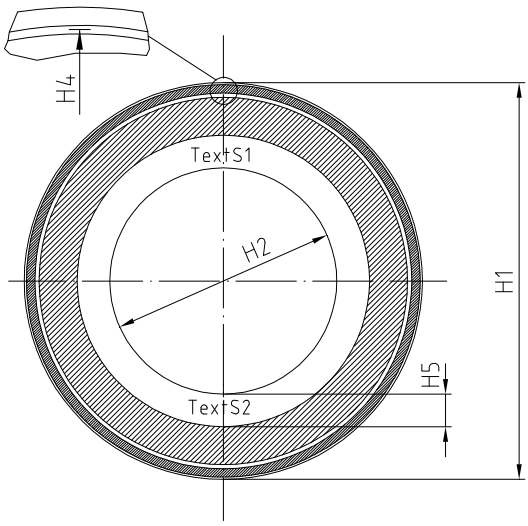

Design Example

Item	Parameter	Comments	[mm]	Tolerance
H1	Outer Diameter		26.0	± 100 µm
H2	Inner Diameter		11.6	+ 200 µm
H3	Thickness		1.0	± 100 µm
H4	Radius of Chip Center	referred to origin	11.0	
H5	Distance Pattern to Drill Hole		2.0	
H6	Code Track Excentricity		±0.2	
H7	TextS1	readable on side of pattern	PT6S	
H8	TextS2	readable on side of pattern	26-1250	

TRACK LAYOUT

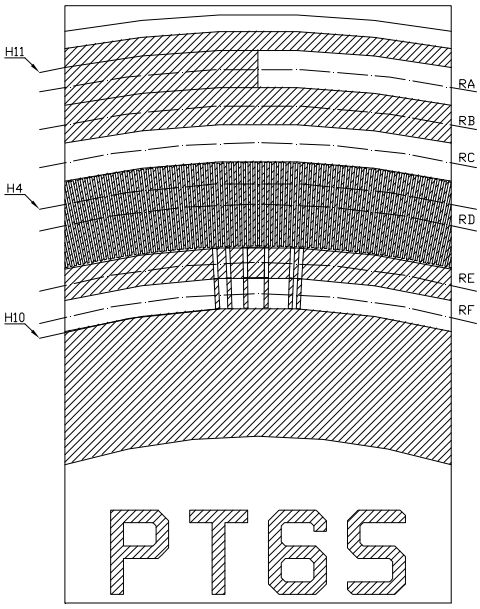

Item	Parameter	Comments	[mm]
H4	Radius of Chip Center	referred to origin	11.00
H11	Code Pattern Radius	end	12.58
H10	Code Pattern Radius	begin	9.52
RA	Radius Track U		12.36
RB	Radius Track V		11.92
RC	Radius Track W		11.48
RD	Radius Track A/B		10.75
RE	Radius Track PZ		10.06
RF	Radius Track NZ		9.70

Copyright © 2011, iC-Haus

PHYSICAL DIMENSIONS: Photosensor Array

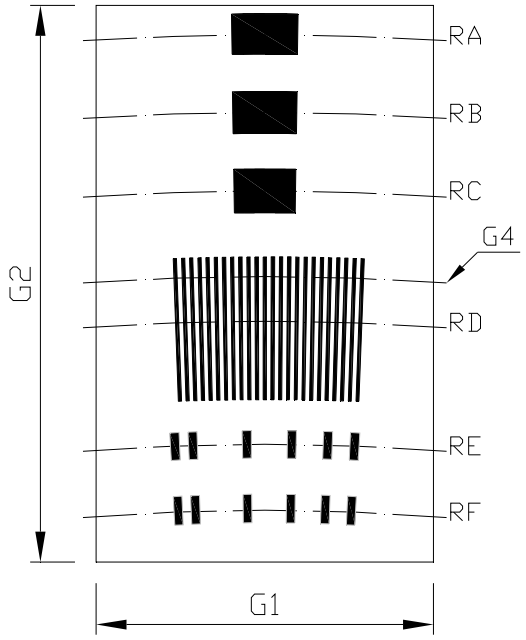

Item	Parameter	Comments	[mm]
G0	Name and Design Release	iC-PT2613	
G1	Window Width		1.90
G2	Window Height		3.24
G4	Radius of Chip Center	referred to origin	11.00
RA	Radius Track U		12.36
RB	Radius Track V		11.92
RC	Radius Track W		11.48
RD	Radius Track A/B		10.75
RE	Radius Track PZ		10.06
RF	Radius Track NZ		9.70

TRACK ASSIGNMENT: Photosensor Array

Radius	Signal			
RA	4 PPR U			
RB	4 PPR V			
RC	4 PPR W			
RD	1250 PPR PA	1250 PPR PB	1250 PPR NA	1250 PPR NB
RE	1 PPR PZ			
RF	1 PPR NZ			

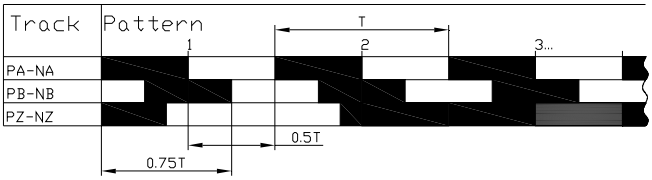

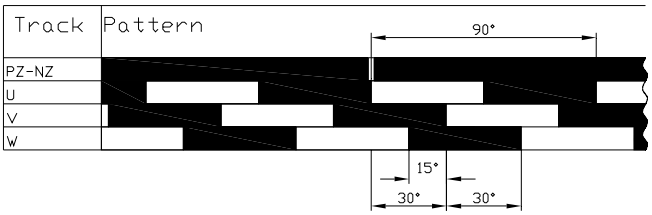

iC-Haus expressly reserves the right to change its products and/or specifications. An info letter gives details as to any amendments and additions made to the relevant current specifications on our internet website www.ichaus.com/infoletter; this letter is generated automatically and shall be sent to registered users by email. Copying – even as an excerpt – is only permitted with iC-Haus' approval in writing and precise reference to source. iC-Haus does not warrant the accuracy, completeness or timeliness of the specification and does not assume liability for any errors or omissions in these materials. The data specified is intended solely for the purpose of product description. No representations or warranties, either express or implied, of merchantability, fitness for a particular purpose or of any other nature are made hereunder with respect to information/specification or the products to which information refers and no guarantee with respect to compliance to the intended use is given. In particular, this also applies to the stated possible applications or areas of applications of the product. iC-Haus conveys no patent, copyright, mask work right or other trade mark right to this product. iC-Haus assumes no liability for any patent and/or other trade mark rights of a third party resulting from processing or handling of the product and/or any other use of the product. As a general rule our developments, IPs, principle circuitry and range of Integrated Circuits are suitable and specifically designed for appropriate use in technical applications, such as in devices, systems and any kind of technical equipment, in so far as they do not infringe existing patent rights. In principle the range of use is limitless in a technical sense and refers to the products listed in the inventory of goods compiled for the 2008 and following export trade statistics issued annually by the Bureau of Statistics in Wiesbaden, for example, or to any product in the product catalogue published for the 2007 and following exhibitions in Hanover (Hannover-Messe).
We understand suitable application of our published designs to be state-of-the-art technology which can no longer be classed as inventive under the stipulations of patent law. Our explicit application notes are to be treated only as mere examples of the many possible and extremely advantageous uses our products can be put to.