iC-MZ
DIFFERENTIAL HALL SWITCH

FEATURES

- Dual Hall sensors set 2.0 mm apart
- Magnetic field frequency range from DC to 40 kHz
- Supply voltage range 4.5 to 36 V
- Complementary push-pull line driver outputs with integrated line adaptation
- Output stages are current limited and short-circuit-proof due to temperature shutdown
- Min. 200 mA output current at 24 V supply voltage
- Low driver stage saturation voltage (< 0.4 V at 30 mA)
- RS422-compatible (TIA / EIA standard)
- Temperature and supply voltage monitor with error messaging
- Amplified differential sensor signal, accessible for diagnostic purposes
- Additional mode of operation (twofold line driver)
- Temperature range from -40°C to 125°C (Option: -55°C)

APPLICATIONS

- Gear wheel sensing
- Pole wheel and magnetic tape scanning
- Magnetic incremental encoders
- Proximity switches
- Two-channel line drivers up to 100 kHz

PACKAGES

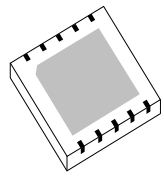

DFN10 4 mm x 4 mm

BLOCK DIAGRAM

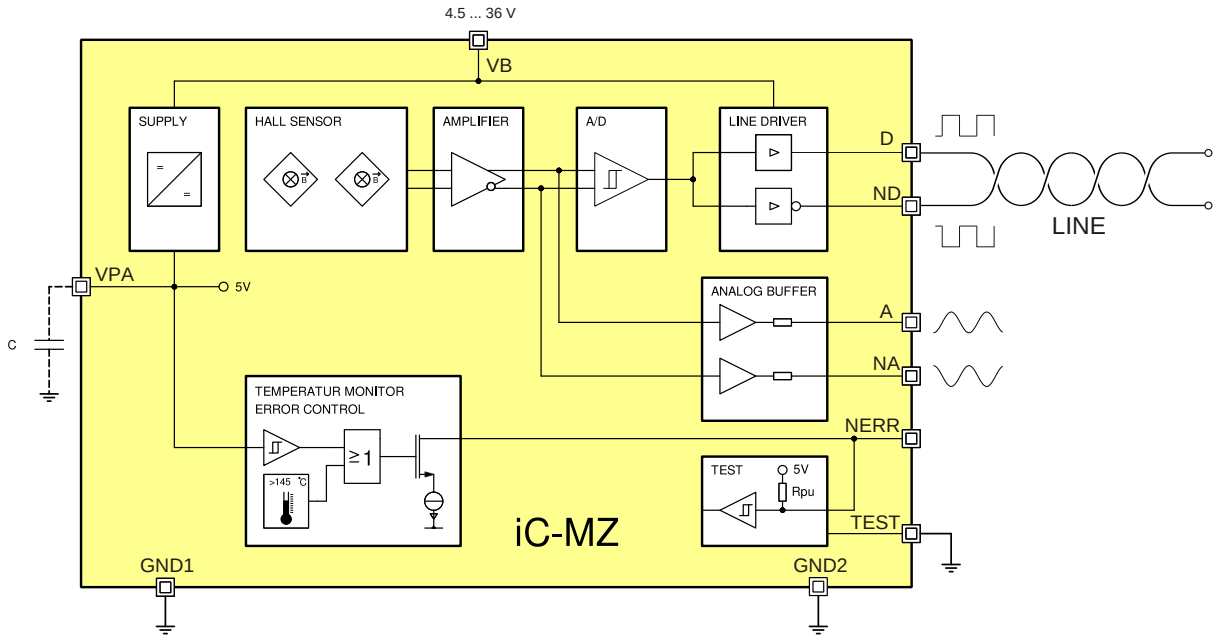

Copyright © 2011 iC-Haus

DESCRIPTION

Hall-effect device iC-MZ is a differential magnetic sensor used to scan pole wheels or ferromagnetic gear wheels. It contains two Hall sensors set 2.0 mm apart, a differential amplifier with a back-end comparator and a complementary line driver. A difference in field strength of the magnetic normal components at iC-MZ's two Hall elements is amplified and evaluated as an analog signal and fed to the integrated line drivers as a complementary digital signal. The digital output signal tracks the change in sign of the field strength difference with a given hysteresis and thus provides a clear switch.

With a moving gear or pole wheel the frequency of the tooth or pole pair corresponds to the frequency of the output signal. The amplified analog differential sensor signal is available for diagnostic purposes at pins A and NA.

Once the device has been switched on the digital outputs are initially in a predefined start state with D at low and ND at high; the analog outputs A and NA switched to high impedance. Following a delay of about 200 µs the analog outputs are activated and the status of the two Hall sensors ist transmitted by the line drivers if the difference in field strength is sufficiently strong.

The complementary line drivers are suitable for supply voltages of 4.5 to 36 V with output impedances between 40 and 110 Ω. An integrated over temperature and undervoltage monitor switches the output stages to high impedance in the event of error and activates the open drain output NERR.

By activating the TEST input the device can be used as an independent two-channel line driver. In this case, the outputs D and ND are controlled by the inputs A and NA.

The analog section of the iC-MZ circuit is fed by an internal supply of 5 V which is available at pin VPA for reference purpose. To improve signal quality, a capacitor can be connected to this pin.

PACKAGES

PIN CONFIGURATION

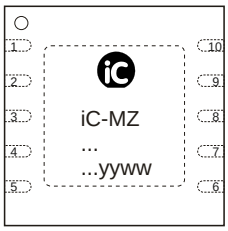

PIN FUNCTIONS

No.	Name	Function
1	GND1	Ground
2	D	Digital Output, not inverted
3	VB	Supply Voltage
4	ND	Digital Output, inverted
5	GND2	Ground
6	TEST	Linedriver Test Mode
7	NERR	Error Output, open drain
8	VPA	Internal 5 V Supply Voltage
9	NA	Analog Output, invertiert
10	A	Analog Output, non invertierend

For improved thermal dissipation the thermal pad on the package underside should be connected to ground in a suitable manner (*ground plane*). GND1 and GND2 should both be connected to ground.
Orientation of the logo (iC MZ CODE ...) is subject to alteration.

ABSOLUTE MAXIMUM RATINGS

Beyond these values damage may occur; device operation is not guaranteed. Absolute Maximum Ratings are no Operating Conditions. Integrated circuits with system interfaces, e.g. via cable accessible pins (I/O pins, line drivers) are per principle endangered by injected interferences, which may compromise the function or durability. The robustness of the devices has to be verified by the user during system development with regards to applying standards and ensured where necessary by additional protective circuitry. By the manufacturer suggested protective circuitry is for information only and given without responsibility and has to be verified within the actual system with respect to actual interferences.

Item No.	Symbol	Parameter	Conditions	Min.	Max.	Unit
G001	VB	Supply Voltage		-0.4	40	V
G002	V()	Voltage at D, ND, NERR		-0.4	40	V
G003	V()	Voltage at A, NA, TEST		-0.4	6	V
G004	I(VB)	Current in VB		-100	100	mA
G005	I()	Current in D, ND		-600	600	mA
G006	I(NERR)	Current in NERR		-10	30	mA
G007	I()	Current in A, NA, TEST		-4	4	mA
G008	Vd()	Susceptibility to ESD at all pins	HBM 100 pF discharged through 1.5 kΩ		1	kV
G009	Tj	Operating Junction Temperature		-55	150	°C
G010	Ts	Storage Temperature Range		-55	150	°C

THERMAL DATA

Operating Conditions: VB = 4.5..36 V, unless otherwise stated

Item No.	Symbol	Parameter	Conditions	Min.	Typ.	Max.	Unit
T01	Ta	Operating Ambient Temperature Range		-40		+125	°C
			Extended Temperature Range (Option -ET)	-55		+125	°C
T02	Rtjc	Thermal Resistance Chip/Case			10		K/W
T03	Rthja	Thermal Resistance Chip/Ambient	Mounted on PCB, with thermal pad of 2 cm^2		40		K/W

All voltages are referenced to ground unless otherwise stated.
All currents flowing into the device pins are positive; all currents flowing out of the device pins are negative.

ELECTRICAL CHARACTERISTICS

Operating Conditions: VB = 4.5..36 V, Tj = -55...135 °C unless otherwise stated

Item No.	Symbol	Parameter	Conditions	Min.	Typ.	Max.	Unit
General							
001	fmagn	Magnetic Cut-off Frequency	(upper 3 dB frequency corner)		40		kHz
002	VB	Permissible Supply Voltage		4.5		36	V
003	I(VB)	Supply Current in VB	open outputs, fmagn = 0		9	12	mA
004	$\|H_{dc}\|$	Magnitude of mean magnetic field strength	$\|H_{dc}\| = \|H_1 + H_2\| / 2$, Outputs A, NA not saturated		400		kA/m
005	$\|\Delta H\|$	Maximal magnetic field difference	$\|\Delta H\| = \|H_1 - H_2\|$		120		kA/m
006	$H_{t,hi}$	Upper magnetic trigger threshold	Output D lo → hi for $\Delta H > H_{t,hi}$		2		kA/m
007	$H_{t,lo}$	lower magnetic trigger threshold	Output D hi → lo for $\Delta H < H_{t,lo}$		-2		kA/m
008	$H_{t,hys}$	Hysteresis	$H_{t,hys} = H_{t,hi} - H_{t,lo}$		4		kA/m
009	Vc()lo	Clamp Voltage lo at Pins VB, VPA, VPD, A, NA, D, ND, NERR, TEST	I() = -10 mA	-1.4		-0.35	V
010	Vc()hi	Clamp Voltage hi at Pins VB, NERR	I(VB) = 10 mA, Test = hi, I(NERR) = 1 mA	37		50	V
011	Vc()hi	Clamp Voltage hi at Pins VPA, VPD, A, NA, TEST	I(VPA, VPD) = 10 mA, I(A, NA, TEST) = 2 mA	6		20	V
012	tsetup	System enable	from power on to activating outputs		200	400	µs
013	I(VB)	Supply Current in VB, Test Mode	open outputs, Test = hi (line driver mode)			6	mA
Temperatur Monitor							
301	Toff	Thermal Shutdown Threshold		145		175	°C
302	Ton	Thermal Lock-on Threshold		135		165	°C
303	Thys	Thermal Shotdown Hysteresis	Thys = Ton - Toff	5	10	20	°C
Differential Outputs A, NA, Line Driver Test Mode							
501	Rout()	Output resistance		14	20	28	kΩ
503	Vdc()	Mean output voltage	$\Delta H = 0$	1.5	1.8	2.1	V
504	$\|\Delta V()\|$	Output voltage difference	$\|\Delta H\| = 1$kA/m, $\|\Delta V()\| = \|V(A) - V(NA)\|$		70		mV
505	Vt()hi	Input Threshold Voltage hi	TEST = hi (Leitungstreibermodus)			2	V
506	Vt()lo	Input Threshold Voltage lo	TEST = hi (Leitungstreibermodus)	0.8			V
507	Vt()hys	Input Hysteresis	TEST = hi (Leitungstreibermodus)	0.2	0.4	0.6	V
508	Ipd()	Pull-Down Current	V() = 0.8 V, TEST = hi	10		100	µA
509	Ipd()	Pull-Down Current	V() = 5.5 V, TEST = hi	20		200	µA
Error Output NERR							
601	Vs()lo	Saturation Voltage lo at NERR	I(NERR) = 2.5 mA, NERR = lo			0.4	V
602	Isc()lo	Short-Circuit Current lo in NERR	V(NERR) = 2 V...VB, NERR = lo	4	12	25	mA
603	Ilk()	Leakage Current in NERR	V(NERR) = 5.5 V...VB, NERR = hi	-10		10	µA
604	VB	Supply Voltage VB for NERR Function	I(NERR) = 2.5 mA, NERR = lo, Vs(NERR) < 0.4 V	3.2			V
605	Rpu()	Pull-Up-Resistor at NERR	V(NERR) = 0...4.5 V	1	2.5	5.5	MΩ
Test Mode NERR, TEST							
704	Rpd(TEST)	Pull-Down Resistor at TEST	Test Mode = off, V(TEST) ≤ VPA	11	20	36	kΩ
710	Vt(TEST)hi	Threshold Voltage hi at TEST				2	V
711	Vt(TEST)lo	Threshold Voltage lo at TEST		0.8			V
712	Vt(TEST)hy	Hysteresis		0.2	0.4	0.6	V
713	Vt(NERR)hi	Threshold Voltage hi at NERR	Test = hi			2.5	V

ELECTRICAL CHARACTERISTICS

Operating Conditions: VB = 4.5..36 V, Tj = -55...135 °C unless otherwise stated

Item No.	Symbol	Parameter	Conditions	Min.	Typ.	Max.	Unit
Line Driver D, ND							
801	Vs()hi	Saturation Voltage high	Vs()hi = VB - V(), I() = -10 mA, output = hi			0.2	V
802	Vs()hi	Saturation Voltage high	Vs()hi = VB - V(), I() = -30 mA, output = hi			0.4	V
803	Isc()hi	Short circuit current high	V() = VB - 1.5 V, output = hi	-70	-50	-35	mA
804	Isc()hi	Short circuit current high	V(Ax) = 0 V, output = hi	-600			mA
805	Rout()hi	Output resistance	VB = 10...36 V, V() =0.5 * VB	40	75	110	Ω
806	SR()hi	Slew Rate high	VB= 36 V, Cl() = 100 pF	100	250		V/µs
807	Vc()hi	Free Wheel Clamp Voltage high	I() = 100 mA, VB = VCC = GND	0.5		1.3	V
808	Vs()lo	Saturation Voltage low	I() = 10 mA, output = lo			0.2	V
809	Vs()lo	Saturation Voltage low	I() = 30 mA, output = lo			0.4	V
810	Isc()lo	Short circuit current low	V() = 1.5 V, output = lo	35	50	70	mA
811	Isc()lo	Short circuit current low	V() = VB, output = low			600	mA
812	Rout()lo	Output resistance	VB = 10...36 V, V() = 0.5 * VB	40	75	110	Ω
813	SR()lo	Slew Rate low	VB = 36 V, Cl() = 100 pF	100	250		V/µs
814	Vc()lo	Free Wheel Clamp Voltage low	I() = -100 mA	-1.3		-0.5	V
815	Ilk()	Leakage Current in D, ND	VB < VBoff; V() = 0...VBoff	-10		10	µA
816	Ilk()	Leakage Current in D, ND	T > Toff; V() = 0...VB	-10		10	µA
VB Voltage Monitor							
901	VBon	Turn-on Threshold VB				4.45	V
902	VBoff	Turn-off Threshold VB		3.2			V
903	VBhys	Hysteresis	VPAhys = VPAon − VPAoff	100	200		mV
907	V(VPA)	Voltage at VPA	VB > 5 V	4.5	5	5.5	V
908	V(VPA)	Voltage at VPA	VB ≤ 5 V	4		5	V

DEFINITION OF MAGNETIC FIELDS AND SENSOR OUTPUT SIGNALS

In essence iC-MZ is non-magnetic and thus has practically no effect on the magnetic field to be scanned. The Hall sensors on the topside of the chip or at package level (x, y) are sensing the z component H_z of the magnetic field vector at the site of each sensor.

Magnetic field component H_z counts as a positive when the field lines emerge on the printed upper side of the chip.

The source of the magnetic field (magnets, coils) can be placed above or below (back bias) the iC package.

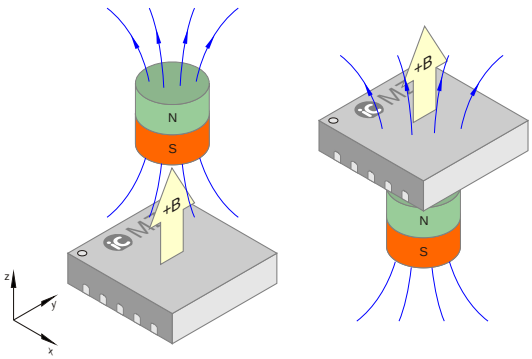

Figure 1: Example magnet positions in relation to iC-MZ

The difference ΔH between z components H_1 and H_2 of the magnetic field strengths at the site of the two Hall sensors S1 and S2 is significant for the electrical output signal.

$$\Delta H = H_1 - H_2$$

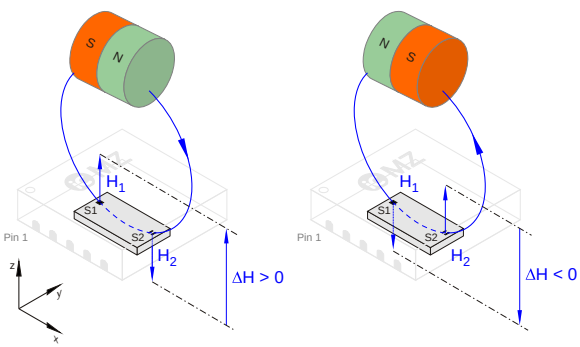

Figure 2: Definition of the difference in field strength ΔH

In accordance with Figure 2 a distinction can be made between the different position and polarity of a magnet from the sign of the sensor signal. Following the amplification of the Hall voltage difference a differential analog signal V(A) or V(NA) is available at pins A and NA with a mean voltage of Vdc (Figure 3).

If ΔH exceeds a limit of $H_{t,hi}$, digital output D switches to high. If ΔH undershoots a threshold of $H_{t,lo}$, output D is switched back to low. The switching status complementary to D is available at output ND.

If differential field strength ΔH lies within the $H_{t,lo}..H_{t,hi}$ interval, the momentary switching status of the driver outputs does not change.

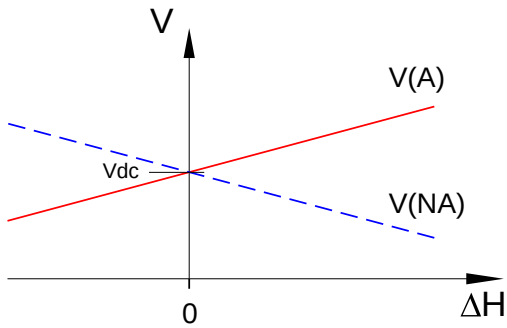

Figure 3: Analog signals A and NA as a function of the difference in field strength ΔH

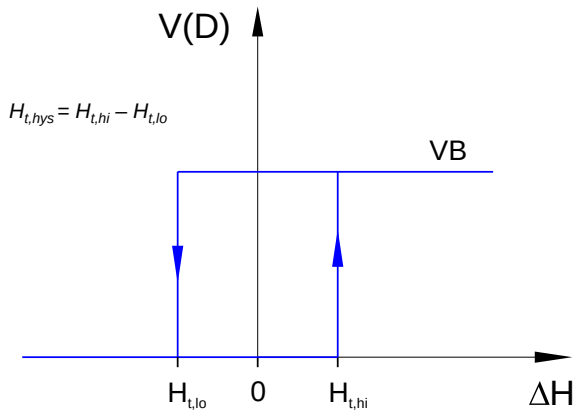

Figure 4: Digital output D in dependence on the difference in field strength ΔH

HALL SENSOR POSITION

The position of the two Hall sensors S1 and S2 is shown in Figure 5 (top view).

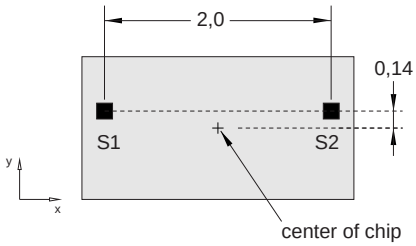

Figure 5: Position of Hall sensors S1 and S2 in relation to the chip center (dimensions in mm)

The position tolerances of the chip within the DFN10 package are given in Figure 6.

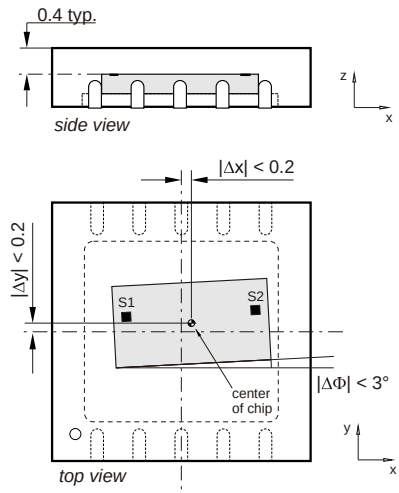

Figure 6: Maximum placement error of the chip (exaggerated view) in a DFN10 package (dimensions in mm)

LINE DRIVER MODE

iC-MZ's line driver mode is activated by TEST = high, i.e. by a supply of VPA = 5 V. Pins A and NA then function as independent inputs for line driver outputs D and ND. When pins A and NA are connected together and used as common input, D and ND acts as buffered and inverted outputs.

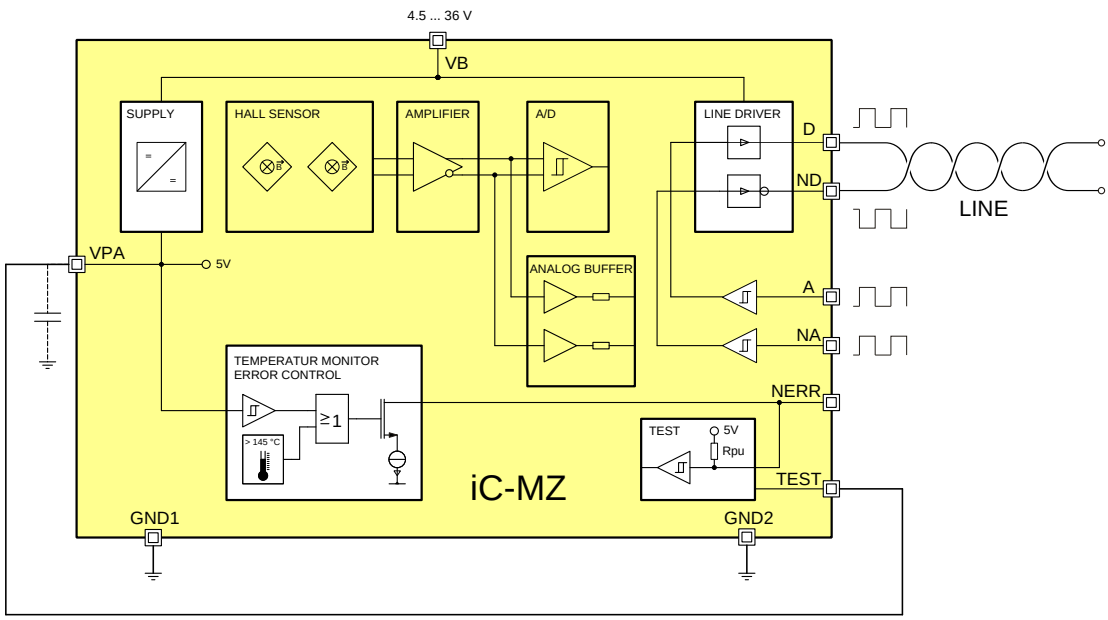

Figure 7: iC-MZ in line driver mode

APPLICATON NOTES

The complementary line driver couples the output signals via lines to industrial 24 V systems. Due to the possible event of short circuiting in the line the drivers are current limited and shut down with excessive temperature. The maximum possible signal frequency depends on the capacitive loading of the outputs (line length) or the power dissipation in iC-MZ caused by such. With an unloaded output the maximum output voltage is equivalent to supply VB - with the exception of the saturation voltages.

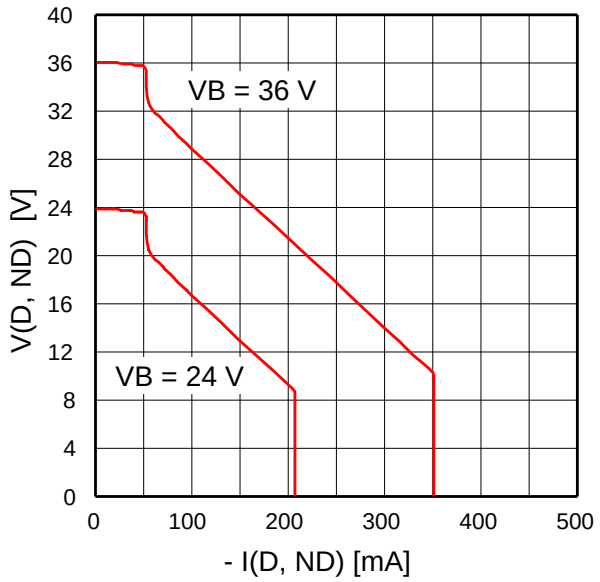

Figure 8: Load dependence of the output voltage

Figure 8 illustrates the typical highside output characteristics of a driver acting as a load for two different supply voltages. Across a wide range the differential output resistance is typically 75 Ω.

LINE EFFECTS

With 24 V signals data is often transmitted without the line beeing terminated with the characteristic impedance. Mismatched line terminations such as these cause reflections which travel back and forth if no suitable adjustments have been made at the driver end of the setup. With rapid pulse trains transmission is then disrupted.

In iC-MZ the reflection of return signals is hindered by an integrated impedance adapter. On pulse transmission the amplitude at the iC-MZ output first rises to approximately half the value of supply voltage VB as the internal driver resistor and the line impedance adapter form a voltage divider. Following a delay determined by the length of the line the impedance coupled into the line in this way is reflected at the high impedance end of the setup and travels back towards the driver. As the latter is well adjusted to the line by its interior resistor, the return pulse is largely absorbed. Fast signals can thus also be transmitted in this manner along lines with a characteristic impedance of between 40 and 110 Ω.

BOARD LAYOUT

The thermal dissipation of iC-MZ is improved by connecting the thermal pad on the underside to a large area of copper on the board. Blocking capacitors used to filter the local iC supply should be connected up to the VB and GND package pins across the shortest possible distance.

NERR connection

Excessive temperature and overvoltage errors are indicated at output NERR. In normal operating mode the pin is at high impedance (open drain); it is switched to GND in the event of error. It can be connected up to VB via an external resistor. If NERR is not used, it must be left open and not be connected to GND.

APPLICATION EXAMPLES

Gear wheel scanning

Logging the position and rotation of a gear wheel with iC-MZ requires that the gear wheel is made of a soft magnetic basic material with which a magnetic field applied externally through the gear geometry can be modulated. The strength of the modulation is greatest at the gear rim, calling for iC-MZ to be placed at the shortest possible operating distance to the gear wheel.

The necessary external bias field is generated by a back bias magnet placed behind iC-MZ. The magnet should be positioned central to the package so that the two Hall sensors are impinged by equal magnetic field strengths and a field strength offset is avoided; the latter would make a greater difference in modulation field strength necessary for switching purposes. Field homogeneity can be improved by placing a pole piece between the magnet and iC-MZ.

The strength of the magnetic field modulation depends not just on the operating distance and the intensity of the bias field but also on the module and addendum of the gear wheel. The distance of the teeth along the perimeter of the wheel stipulates the cycle with which the magnetic field strength is modulated. An optimum modulation depth is achieved when the gear wheel geometry is selected so that the two Hall sensors on the chip are opposite a tooth or a gap and the sensors provide signals in antiphase. With the given iC-MZ sensor distance of 2 mm a tooth distance of about 4 mm is advantageous but not imperative. Even if the geometry of the wheel is not adapted to suit the sensor, the signals generated by the two Hall sensors share a fixed phase relation.

Figure 9 illustrates the typical course of magnetic induction $B = \mu_0 \cdot H$ at the two Hall sensors, dependent on angle of rotation ϕ of the gear wheel. In an ensuing amplification process analog signals V_A and V_{NA} are formed from the differential signal; digital signals V_D and V_{ND} are generated by the back-end comparator with hysteresis.

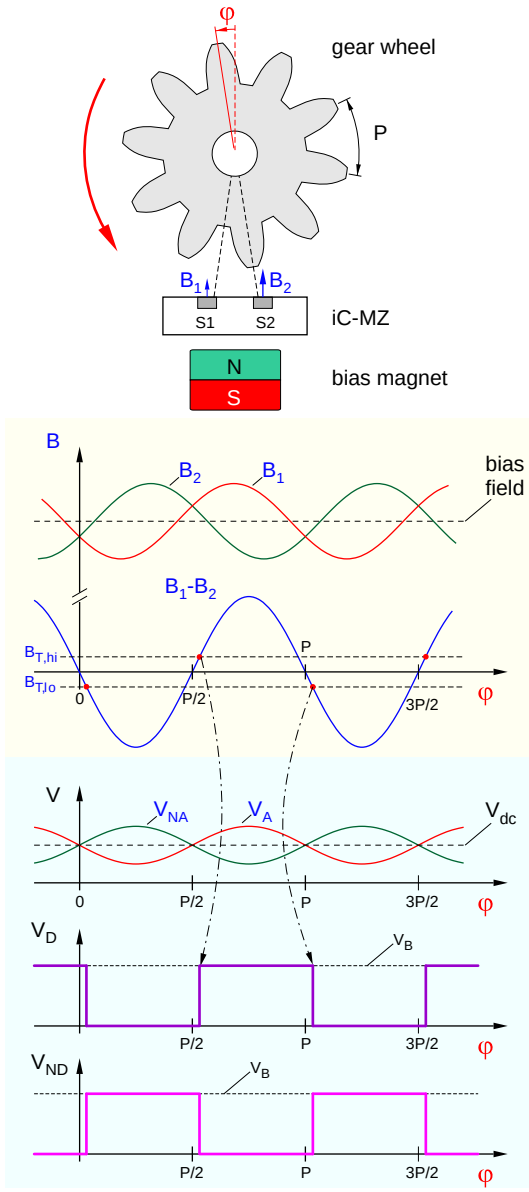

Figure 9: Gear wheel scanning

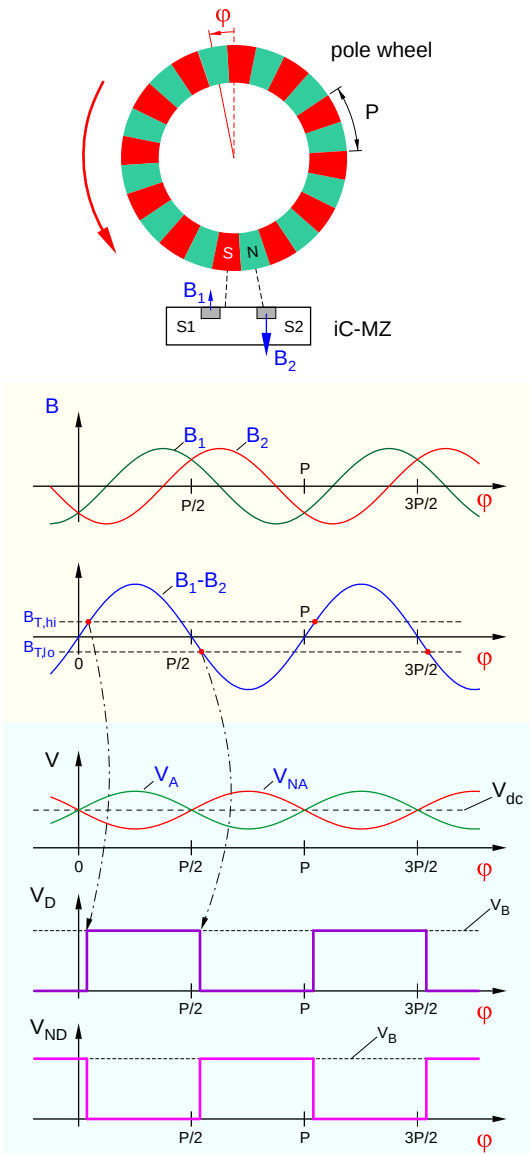

Figure 10: Pole wheel scanning

Pole wheel scanning

Pole wheels have a cyclic magnetization along their perimeter which is used for the magnetic modulation of iC-MZ. The intensity of the magnetic field is greatest along the perimeter and significantly diminishes with an increase in distance , so that iC-MZ should be placed as close to the pole wheel as possible.

The magnetic subdivision along the pole wheel perimeter is repeated by a cycle P; iC-MZ's electrical output signals also demonstrate this periodicity. The pole wheel is optimally adjusted when the Hall sensors are activated in antiphase, i.e. the distance of the Hall sensors is equivalent to just half a magnetic cycle. With iC-MZ this is the case when P = 4 mm.

The dimensions of a pole wheel and its magnetic subdivision are often stipulated by the application so that the signals provided by the two Hall sensors are no longer in antiphase but in an arbitrary yet fixed phase relation to one another.

The differential signal and the analog and digital iC-MZ output signals derived from it in dependence on the angle of rotation of a pole wheel are shown in Figure 10.

iC-Haus expressly reserves the right to change its products and/or specifications. An info letter gives details as to any amendments and additions made to the relevant current specifications on our internet website www.ichaus.de/infoletter; this letter is generated automatically and shall be sent to registered users by email.
Copying – even as an excerpt – is only permitted with iC-Haus' approval in writing and precise reference to source.
iC-Haus does not warrant the accuracy, completeness or timeliness of the specification and does not assume liability for any errors or omissions in these materials.
The data specified is intended solely for the purpose of product description. No representations or warranties, either express or implied, of merchantability, fitness for a particular purpose or of any other nature are made hereunder with respect to information/specification or the products to which information refers and no guarantee with respect to compliance to the intended use is given. In particular, this also applies to the stated possible applications or areas of applications of the product.
iC-Haus conveys no patent, copyright, mask work right or other trade mark right to this product. iC-Haus assumes no liability for any patent and/or other trade mark rights of a third party resulting from processing or handling of the product and/or any other use of the product.
As a general rule our developments, IPs, principle circuitry and range of Integrated Circuits are suitable and specifically designed for appropriate use in technical applications, such as in devices, systems and any kind of technical equipment, in so far as they do not infringe existing patent rights. In principle the range of use is limitless in a technical sense and refers to the products listed in the inventory of goods compiled for the 2008 and following export trade statistics issued annually by the Bureau of Statistics in Wiesbaden, for example, or to any product in the product catalogue published for the 2007 and following exhibitions in Hanover (Hannover-Messe).
We understand suitable application of our published designs to be state-of-the-art technology which can no longer be classed as inventive under the stipulations of patent law. Our explicit application notes are to be treated only as mere examples of the many possible and extremely advantageous uses our products can be put to.

ORDERING INFORMATION

Type	Package	Options	Order Designation
iC-MZ	DFN10 DFN10	 extended temperature range -55°C..125°C	iC-MZ DFN10 iC-MZ DFN10 ET -55/125

For technical support, information about prices and terms of delivery please contact:

iC-Haus GmbH
Am Kuemmerling 18
D-55294 Bodenheim
GERMANY

Tel.: +49 (61 35) 92 92-0
Fax: +49 (61 35) 92 92-192
Web: http://www.ichaus.com
E-Mail: sales@ichaus.com

Appointed local distributors: http://www.ichaus.com/sales_partners