iC-HD7

QUAD DIFFERENTIAL LINE DRIVER

FEATURES

- Complementary short-circuit-proof push-pull driver stages for RS422 and 24 V applications up to 2 MHz
- Pin-compatible to 26LS31, xx7272
- Integrated line adaptation for high signal quality at 24 V
- Moderate slew rate reduces EMI
- High driving capability of typically 200 mA at 24 V
- Output saturation of just 0.3 V at 40 mAdc
- Tristate function for bus applications with excessive temperature shutdown
- TTL-/CMOS-compatible Schmitt trigger inputs, voltage-proof to 40 V
- 4.5 to 35 V single supply operation with low static power dissipation
- Operating temperature from -25 to 125 °C (-40 °C is optional)

APPLICATIONS

- Line drivers for 24 V control engineering
- Linear scales and encoders
- Sensor systems

PACKAGES

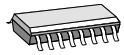

SO16N
RoHS compliant

BLOCK DIAGRAM

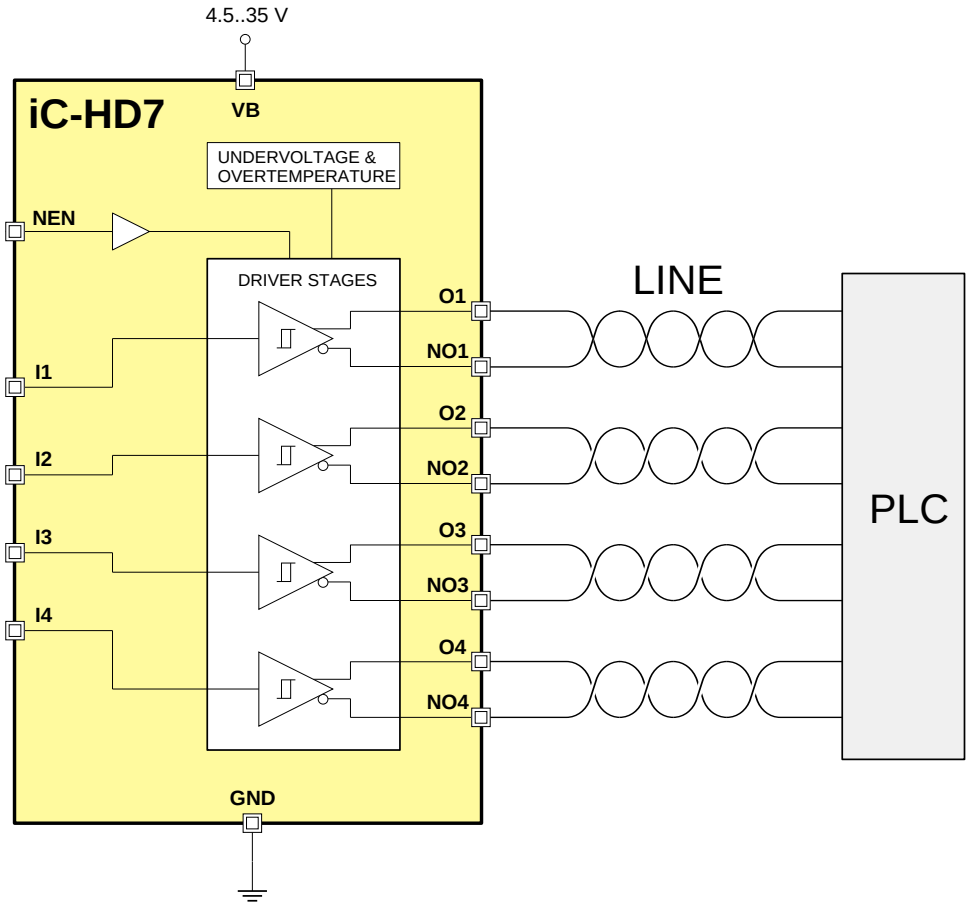

Copyright © 2010 iC-Haus

DESCRIPTION

iC-HD7 is a robust line driver for industrial 5 V and 24 V applications with four complementary output channels.

For signal lines with a characteristic impedance of 30 to 140 Ω the integrated line adapter, optimized to 75 Ω, minimizes ringing effects which arise when there is no line termination.

At a supply of 24 V the push-pull driver stages typically provide 200 mA to discharge the line and also have a low saturation voltage (of typically 200 mV with a 40 mA low-side load). The outputs are current limited and short-circuit-proof, shutting down with excessive temperature.

For bus applications the driver stages can be switched to high impedance by a high at input NEN.

The driver stage inputs have a Schmitt trigger characteristic and are compatible with CMOS and TTL levels.

For test purposes the temperature monitor can be deactivated by applying a voltage of greater than 12 V to input NEN.

The device contains internal ESD protection circuitry.

PACKAGES SO16N, TSSOP20

PIN CONFIGURATION SO16N

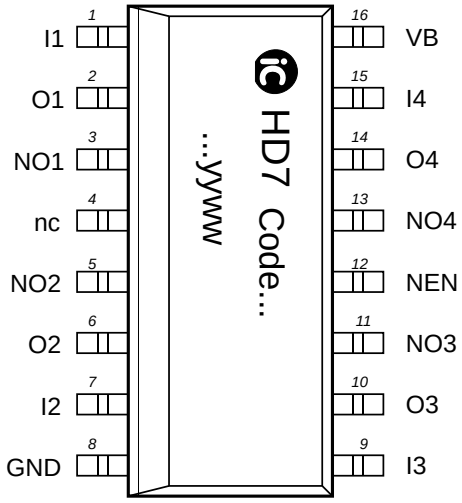

PIN FUNCTIONS

No.	Name	Function
1	I1	Input 1
2	O1	Driver Output 1
3	NO1	Inverted Driver Output 1
4	nc	
5	NO2	Inverted Driver Output 2
6	O2	Driver Output 2
7	I2	Input 2
8	GND	Ground
9	I3	Input 3
10	O3	Driver Output 3
11	NO3	Inverted Driver Output 3
12	NEN	Function Input (low signal enables driver outputs)
13	NO4	Inverted Driver Output 4
14	O4	Driver Output 4
15	I4	Input 4
16	VB	+4.5 to +35 V Supply Voltage

ABSOLUTE MAXIMUM RATINGS

Beyond these values damage may occur; device operation is not guaranteed. Absolute Maximum Ratings are no Operating Conditions. Integrated circuits with system interfaces, e.g. via cable accessible pins (I/O pins, line drivers) are per principle endangered by injected interferences, which may compromise the function or durability. The robustness of the devices has to be verified by the user during system development with regards to applying standards and ensured where necessary by additional protective circuitry. By the manufacturer suggested protective circuitry is for information only and given without responsibility and has to be verified within the actual system with respect to actual interferences.

Item No.	Symbol	Parameter	Conditions	Min.	Max.	Unit
G001	VB	Supply Voltage VB		0	40	V
G002	Vin()	Voltage at Inputs I1...I4		0	VB	V
G003	Vin()	Voltage at Input NEN		0	VB	V
G004	V()	Voltage at Outputs O1...O4, NO1...NO4		0	VB	V
G005	I()	Current in Outputs O1...O4, NO1...NO4		-500	500	mA
G006	Vd()	ESD Susceptibility at all pins	HBM, 100 pF discharged through 1.5 kΩ		2	kV
G007	Tj	Junction Temperature		-40	150	°C
G008	Ts	Storage Temperature		-40	150	°C

THERMAL DATA

Item No.	Symbol	Parameter	Conditions	Min.	Typ.	Max.	Unit
T01	Ta	Operating Ambient Temperature (extended range to -40°C on request)		-25		125	°C
T02	Rthja	Thermal Resistance Chip To Ambient	SO16N surface mounted, no special heat sink		110		K/W

All voltages are referenced to ground unless otherwise stated.
All currents flowing into the device pins are positive; all currents flowing out of the device pins are negative.

ELECTRICAL CHARACTERISTICS

Operating Conditions: VB = 4.5...35 V, Tj = -40...125 °C, unless otherwise noted

Item No.	Symbol	Parameter	Conditions	Min.	Typ.	Max.	Unit
Total Device							
001	VB	Permissible Supply Voltage		4.5		35	V
002	I(VB)	Supply Current in VB	NEN = lo, outputs not loaded		3.8	5.5	mA
003	I(VB)tri	Tristate Current Consumption in VB	NEN = hi		2.7		mA
004	Vc()lo	Clamp Voltage lo at NEN, Ix, NERR	I() = -1 mA	-1.2		-0.3	V
005	Vc()hi	Clamp Voltage hi at NEN, Ix, NERR	I() = 1 mA	VB + 0.3		VB + 1.2	V
006	Vc()lo	Clamp Voltage lo at O1..O4, NO1..NO4	VB = 0 V, I() = -10 mA	-1.2		-0.3	
007	Vc()hi	Clamp Voltage hi at O1..O4, NO1..NO4	VB = 0 V, I() = 10 mA	VB + 0.3		VB + 1.2	
Driver Outputs Ox, NOx (x = 1...4)							
101	Vs()lo	Saturation Voltage lo	I() = 40 mA		0.2	0.6	V
102	Vs()hi	Saturation Voltage hi	Vs()hi = VB - V(); I() = -40 mA		0.3	0.7	V
103	Iout()lo	Driving Capability lo	VB = 30 V, V() = 3 V	40	60	90	mA
104	Iout()hi	Driving Capability hi	VB = 30 V, V() = VB – 3 V	-90	-60	-40	mA
105	Isc()lo	Short-Circuit Current lo	VB = 30 V, V() = VB			500	mA
106	Isc()hi	Short-Circuit Current hi	V() = 0 V	-500			mA
107	Rout()	Output Resistance	VB = 10...30 V, V() = VB/2	50	75	110	Ω
108	SR()lo, hi	Slew-Rate lo/hi	VB = 24 V, CL = 100 pF		400		V/µs
109	tp()lo, hi	In/Out Propagation Delay lo/hi			75	200	ns
110	dtp()	Delay Skew	output Ox vs. NOx	-35		35	ns
111	Ilk()	Output Leakage Current	NEN = hi	-10		10	uA
Driver Inputs Ix (x=1...4) Functional input voltage range V(Ix) = 0 to 7.5 V							
201	Vt()lo	Threshold Voltage lo		0.8			V
202	Vt()hi	Threshold Voltage hi				2.4	V
203	Vt()hys	Input Hysteresis		0.1	0.2		V
204	I()	Input Leakage Current	0 V < V() < 4.5 V	-5		5	µA
Function Input NEN							
301	Vt1()lo	Threshold Voltage lo	Driver enabled for V(NEN) < Vt1()lo	0.8			V
302	Vt1()hi	Threshold Voltage hi				2.4	V
303	Vt1()hys	Input Hysteresis		0.1	0.2		V
304	Vt2()hi	Threshold Voltage hi	Driver enabled without thermal shutdown function for V(NEN) > Vt2()hi	7.5	10	12	V
305	Vt2()hys	Input Hysteresis			0.5		V
306	Iin()	Input Current	5 V < V(NEN) < VB		100	400	µA
307	Iin()	Input Current	0 V < V(NEN) < 5 V	-5		5	µA
Undervoltage Monitoring							
501	Voff	Undervoltage Threshold lo		3.0	3.5		V
502	Von	Undervoltage Threshold hi			3.6	4.1	V
503	Vhys	Undervoltage Hysteresis		35	100		mV
504	tp()shut	Undervoltage Lockout Delay			20		µs

ELECTRICAL CHARACTERISTICS

Operating Conditions: VB = 4.5...35 V, Tj = -40...125 °C, unless otherwise noted

Item No.	Symbol	Parameter	Conditions	Min.	Typ.	Max.	Unit
Temperature Monitoring							
601	Toff	Shutdown Temperature Threshold	NEN = lo	130	150	170	°C
602	ΔToff	Temperature Hysteresis	NEN = lo		8		°C

ELECTRICAL CHARACTERISTICS: Diagrams

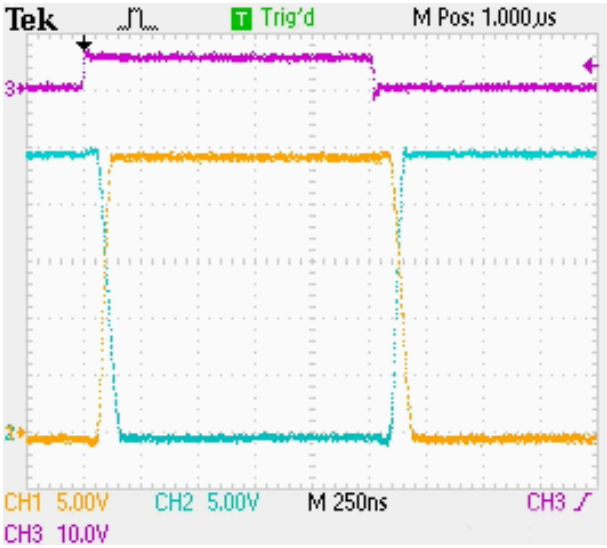

Figure 1: Example of moderate slew rate with unloadad Ox and NOx outputs (VB = 24 V)

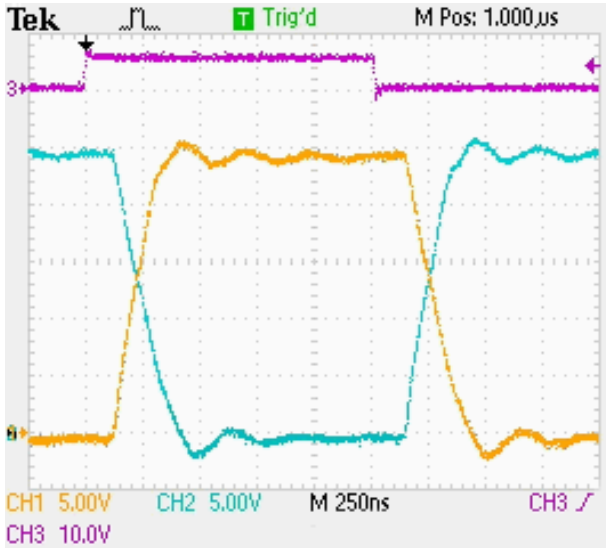

Figure 2: Example of typical line end signal without termination (VB = 24 V, length of cable 10 m)

APPLICATION NOTE

Reverse polarity and circuit protection

For reverse polarity protection electronic circuitry are usually powered via a diode D in the supply line. Under normal operating conditions, this diode will not affect function of the circuitry when the additional forward voltage drop across the diode is accounted for operating voltage specification.

If the supply voltage V_{supply} is suddenly reversed, a load capacitor C may be still fully charged. Therefore, the diode D has to be selected to withstand a voltage difference of at least twice the maximum supply voltage.

Since the reverse polarity protection diode D prevents discharging of the load capacitor C, especially at low power consumption injected charge through disturbances may in general result in capacitor voltage exceeding maximum ratings, leading to malfunction or destruction of circuitry and associated parts. Thus EMC requirements will afford more external circuitry due to the introduction of a reverse polarity diode.

Figure 3 shows the iC-HD7 with the diode D for reverse polarity protection and additional protective devices TS and ZD.

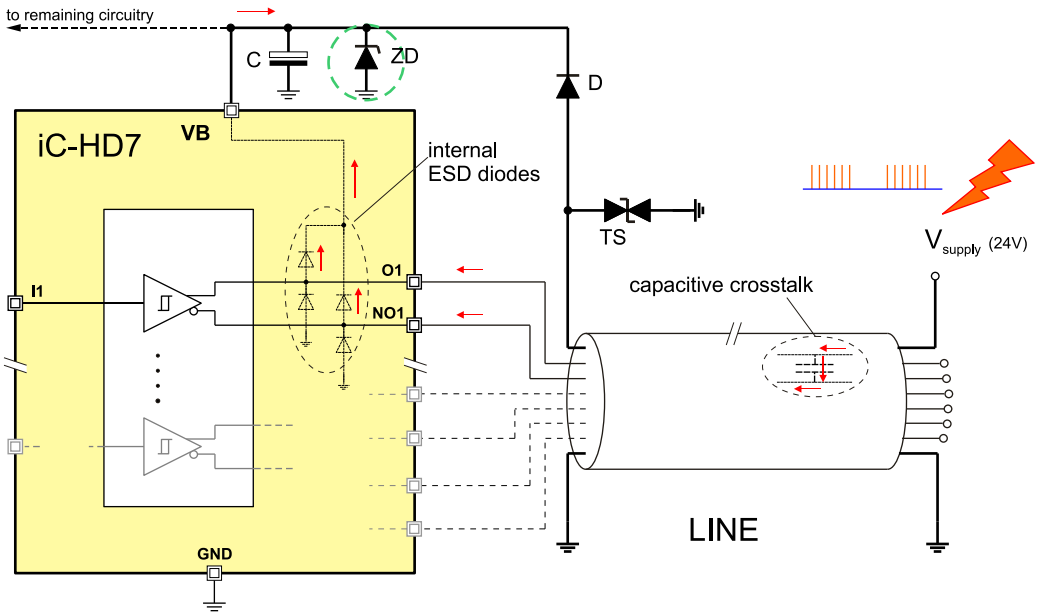

Figure 3: Circuit schematic showing protective devices
D: reverse polarity protective diode; TS: bidirectional suppressor diode; ZD: supply voltage limiting zener diode

For over-voltage protection, the suppressor diode TS absorbs transients on supply line injected externally on the cable. Clamp voltage of the diode TS should be rated slightly above maximum specified supply voltage.

Due to capacitive crosstalk between the wires in the cable of the supply line, additional currents may be injected into the circuitry during transients via the driver pins of iC-HD7 connected directly to the cable. These currents can be passed to ground or to VB by the internal ESD diodes of the iC-HD7. Whereas negative current injection will simply be drained off to ground, positive current injection will charge capacitor C further to higher voltages.

By introducing an additional Zener diode ZD in parallel to capacitor C, excessive charge can be drained off, thus limiting circuitry supply voltage to a safe value, as shown in fig. 4.

Suggested protective devices

As stated above, diode D must withstand at least twice the maximum operating voltage. Assuming VB_{max} specified to be 30V, reverse voltage $V_{R,D}$ of the diode D then should be at least 60 V. Current rating depends on total power consumption of the circuitry, but is usually below 1 amps. Therefore, typical 1 amps rated rectifier diodes like 1N4002 (with $V_{R,D}$ = 100 V) through 1N4007 (with $V_{R,D}$ = 1000 V) or equivalent types (BA157 through BA159) can be used. At VB_{max} of 30V, neither the suppressor diode TS nor the Zener

diode ZD should draw substantial current. Therefore, their breakdown voltage should be chosen to be some volts higher. A 36 V rated suppressor diode with 1.5kW pulse power capability like a 1N6284 or 1.5KE36 the minimum breakdown voltage measured at a test current of 1 mA is stated as 32.4 V. Also, a zener diode like a BZT03C36 rated for 36 V also shows a minimum breakdown voltage of 32.4 V, but measured at test current of 10 mA.

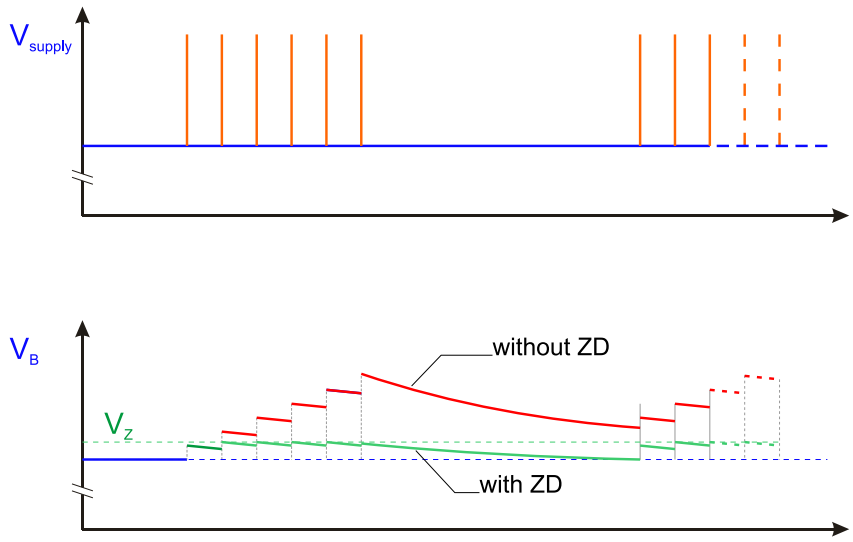

Figure 4: Using zener diode ZD to limit circuit supply voltage

iC-Haus expressly reserves the right to change its products and/or specifications. An Infoletter gives details as to any amendments and additions made to the relevant current specifications on our internet website www.ichaus.de/infoletter; this letter is generated automatically and shall be sent to registered users by email.
Copying – even as an excerpt – is only permitted with iC-Haus approval in writing and precise reference to source.
iC-Haus does not warrant the accuracy, completeness or timeliness of the specification on this site and does not assume liability for any errors or omissions in the materials. The data specified is intended solely for the purpose of product description. No representations or warranties, either express or implied, of merchantability, fitness for a particular purpose or of any other nature are made hereunder with respect to information/specification or the products to which information refers and no guarantee with respect to compliance to the intended use is given. In particular, this also applies to the stated possible applications or areas of applications of the product.
iC-Haus conveys no patent, copyright, mask work right or other trade mark right to this product. iC-Haus assumes no liability for any patent and/or other trade mark rights of a third party resulting from processing or handling of the product and/or any other use of the product.
As a general rule our developments, IPs, principle circuitry and range of Integrated Circuits are suitable and specifically designed for appropriate use in technical applications, such as in devices, systems and any kind of technical equipment, in so far as they do not infringe existing patent rights. In principle the range of use is limitless in a technical sense and refers to the products listed in the inventory of goods compiled for the 2008 and following export trade statistics issued annually by the Bureau of Statistics in Wiesbaden, for example, or to any product in the product catalogue published for the 2007 and following exhibitions in Hanover (Hannover-Messe).
We understand suitable application of our published designs to be state-of-the-art technology which can no longer be classed as inventive under the stipulations of patent law. Our explicit application notes are to be treated only as mere examples of the many possible and extremely advantageous uses our products can be put to.

ORDERING INFORMATION

Type	Package	Order Designation
iC-HD7	SO16N	iC-HD7 SO16N

For technical support, information about prices and terms of delivery please contact:

iC-Haus GmbH
Am Kuemmerling 18
D-55294 Bodenheim
GERMANY

Tel.: +49 (61 35) 92 92-0
Fax: +49 (61 35) 92 92-192
Web: http://www.ichaus.com
E-Mail: sales@ichaus.com

Appointed local distributors: http://www.ichaus.com/sales_partners